NOTES:
1. Material: Natural calcite;
2. G - Fine ground surface;
3. All dimensions are in mm;
4. Protective chamfers: 0.3 mm x 45°;
5. Beam separation angle: 20° @633nm;
6. Extinction ratio: 1:100000;

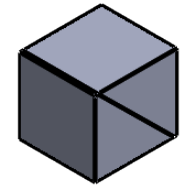

Isometric view 1:1

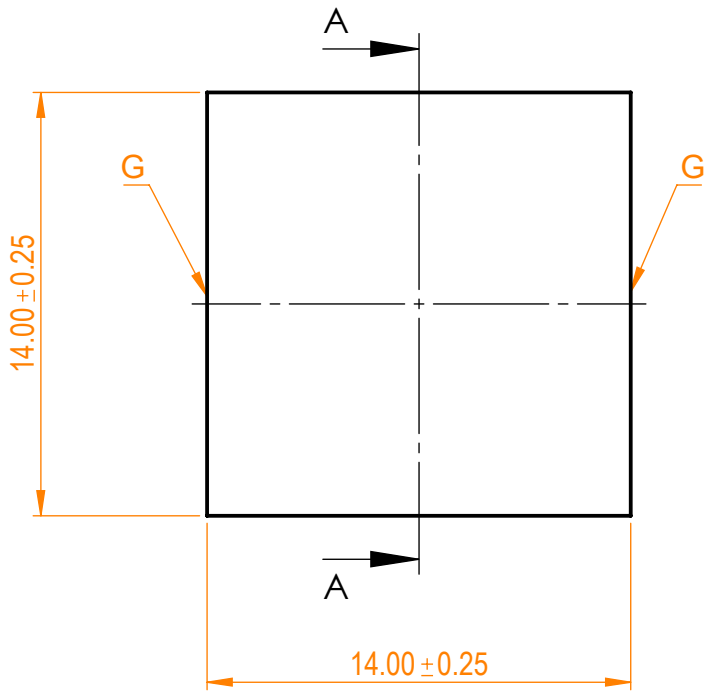


A-A

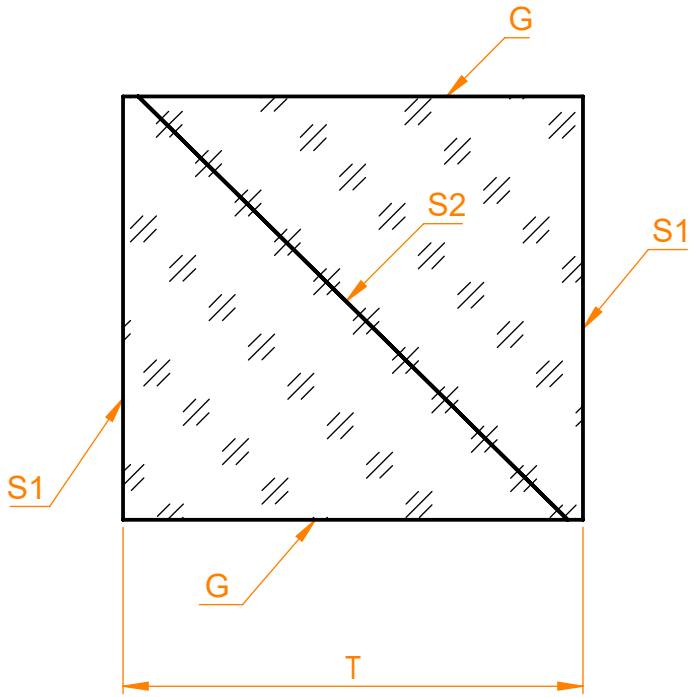


Specifications are subject to change without notice
Dimensions are for reference only

| Parameters | | |
|---|---|---|
| | S1 | S2 |
| Shape | Plano | Plano |
| Surface flatness | λ/4 @633nm | λ/4 @633nm |
| Surface quality | 40-20 s/d | 40-20 s/d |
| Clear aperture | >90% | >90% |
| Coating | - | - |

Eksma Optics
info@eksmaoptics.com
www.eksmaoptics.com

Wollaston prism, H=L=14 mm

| Proprietary | | Name | Date | Part number | Rev. | Scale |
|---|---|---|---|---|---|---|
| The information in this drawing is property of EKSMA Optics. Any reproduction in part or as a whole without the written permission of EKSMA Optics is prohibited. | Approved | A.K. | 2021.04.29 | 450-2142 | A | 4:1 |
| | Drawn | V.S. | 2021.04.29 | | | |