NOTES:

1. Material: Single crystal quartz (rotator),
   Black anodized aluminium (housing);
2. Thickness depends on wavelength and rotation angle;
3. All dimensions are in mm;
4. Protective chamfers: 0.5 mm x 45°;
5. Parallelism: <10 arcsec;
6. Opticsl axis: normal to faces S1, S2 of rotation;
7. Rotation angle of polarization plane: 45° at @1064nm;
8. Laser damage threshold: 5 J/cm^2 at @1064nm, 10nsec pulses;

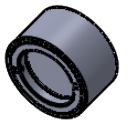

Isometric view 1:2

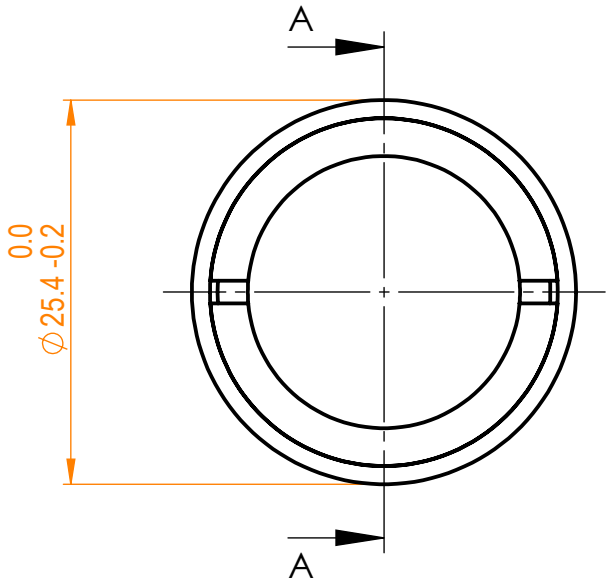

A-A

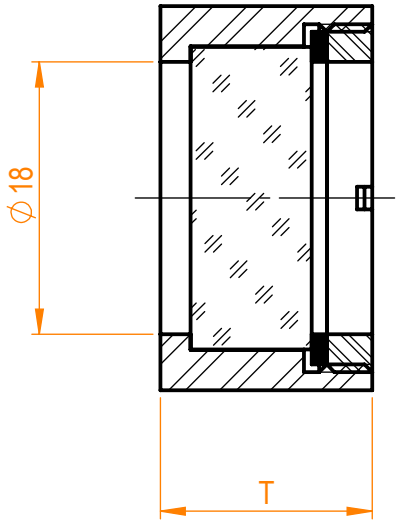

Specifications are subject to change without notice
Dimensions are for reference only

Parameters		
	S1	S2
Shape	Plano	Plano
Surface flatness	λ/10 @633nm	λ/10 @633nm
Surface quality	20-10 s/d	20-10 s/d
Clear aperture	>90%	>90%
Coating	AR<0.2%, AOI=0°	AR<0.2%, AOI=0°

Eksma Optics
info@eksmaoptics.com
www.eksmaoptics.com

PP rotator, D=25.4 mm

Proprietary		Name	Date	Part number	Rev.	Scale
The information in this drawing is property of EKSMA Optics. Any reproduction in part or as a whole without the written permission of EKSMA Optics is prohibited.	Approved	A.K.	2021.04.28	470-4644	A	2:1
	Drawn	V.S.	2021.04.28			