NOTES:
1. Material: N-BK7;
2. G - Fine ground surface;
3. All dimensions are in mm;
4. Wedge tolerance: ±3 arcmin;
5. Protective chamfers: 0.3 mm x 45°;
6. Beam deviation: 0.25° at @1064nm, 0.26° at @532nm;



Isometric view 1:1

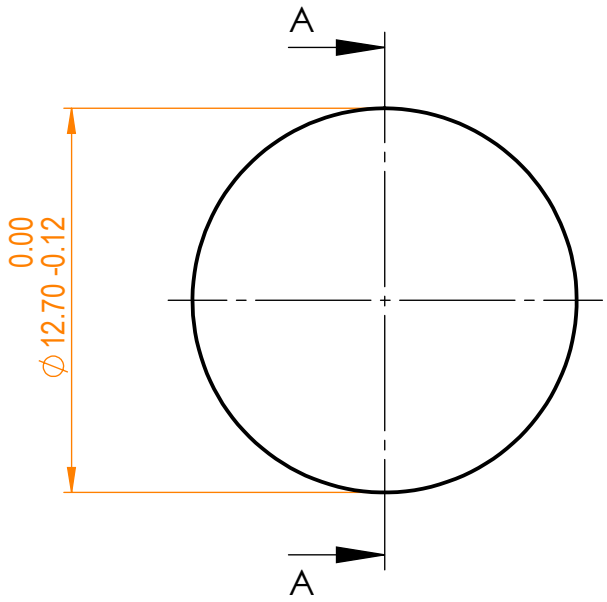

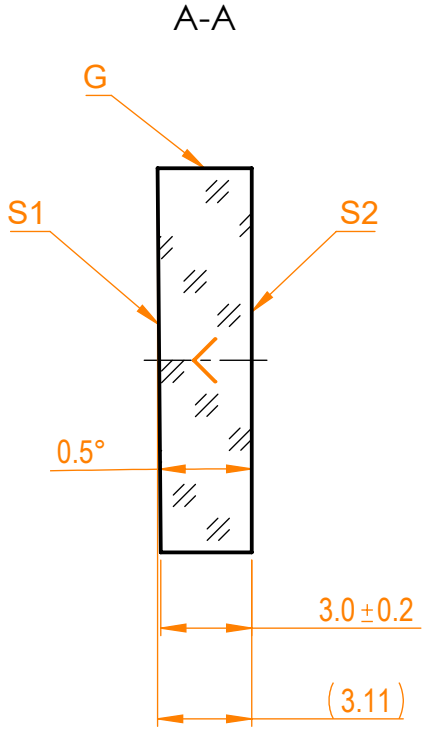

Specifications are subject to change without notice
Dimensions are for reference only

Parameters		
	S1	S2
Shape	Plano	Plano
Wedge	0.5°	0
Surface flatness	λ/4 @633nm	λ/4 @633nm
Surface quality	40-20 s/d	40-20 s/d
Clear aperture	>90%	>90%
Coating	-	-

Eksma Optics
info@eksmaoptics.com
www.eksmaoptics.com

SW prism, D=12.7 mm, T=3 mm

Proprietary		Name	Date	Part number	Rev.	Scale
The information in this drawing is property of EKSMA Optics. Any reproduction in part or as a whole without the written permission of EKSMA Optics is prohibited.	Approved	A.K.	2020.12.14	310-0100E	A	4:1
	Drawn	V.S.	2020.12.14			