NOTES:
1. Material: N-BK7;
2. G - Fine ground surface;
3. All dimensions are in mm;
4. Protective chamfers: 0.3 mm x 45°;
5. Parallelism: <30 arcsec;
6. Angle of incidence: 56°/ Angle of incidence tolerance: ±2°;
7. Transmitted wavefront distortion: λ/10 @633nm;
8. Extinction ratio: T_p:T_s> 200:1;
9. Laser Induced Damage Threshold: >8 J/cm^2 @800nm, 50Hz, 10nsec pulses;

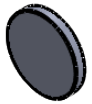

Isometric view 1:2

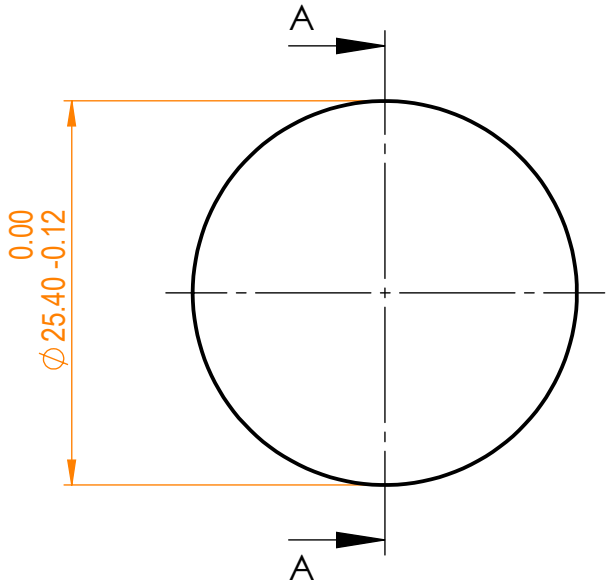

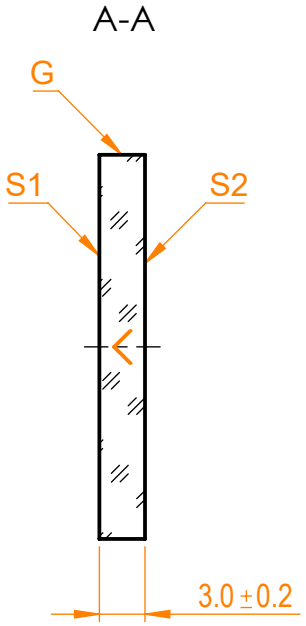

Specifications are subject to change without notice
Dimensions are for reference only

Parameters		
	S1	S2
Shape	Plano	Plano
Surface quality	20-10 s/d	20-10 s/d
Clear aperture	>90%	>90%
Coating	R_s/T_p>99.5/95% @800nm	R_p<0.3% @800nm

Eksma Optics
info@eksmaoptics.com
www.eksmaoptics.com

TF polarizer, D=25.4 mm, T=3 mm

Proprietary
The information in this drawing is property of EKSMA Optics. Any reproduction in part or as a whole without the written permission of EKSMA Optics is prohibited.

	Name	Date	Part number	Rev.	Scale
Approved	A.K.	2021.01.11	420-0256E	A	2:1
Drawn	V.S.	2021.01.11			