NOTES:
1. Material: UVFS;
2. Apex Angle: 165° ± 0.05°;
3. Centration error: ≤ 3 arcmin;
4. G - Fine ground surface;
5. All dimensions are in mm;

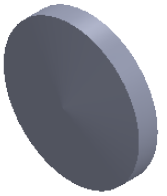

Isometric view 1:1

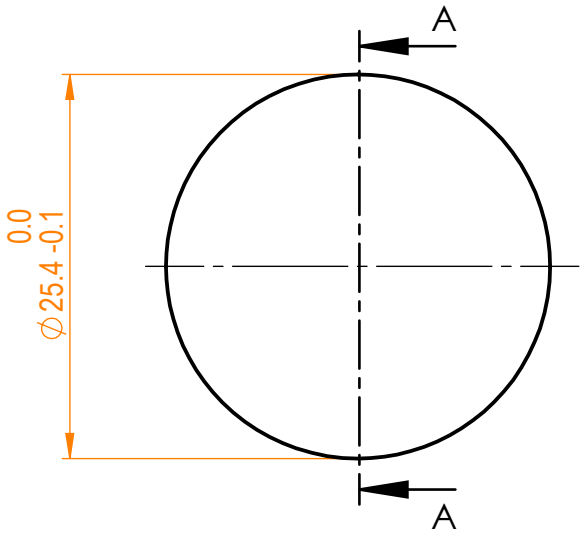

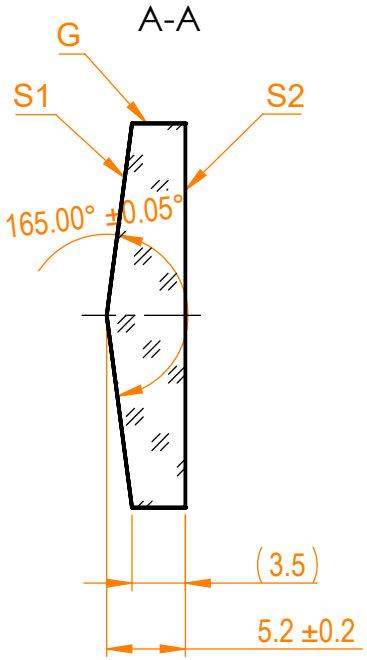

Specifications are subject to change without notice
Dimensions are for reference only

Parameters		
	S1	S2
Shape	Convex	Plano
Apex rounding	dia <0.4 mm	-
Surface quality	40-20 s/d	40-20 s/d
Surface irregularity	λ/4 @632.8 nm	λ/4 @632.8 nm
Clear aperture	≥90%	≥90%
Protective chamfers	0.2 - 0.3 mm x 45°	0.2 - 0.3 mm x 45°

Eksma Optics
info@eksmaoptics.com
www.eksmaoptics.com

UVFS pl/cx axicon lens,
D=25.4 mm, 165° apex angle

Proprietary
The information in this drawing is property of EKSMA Optics. Any reproduction in part or as a whole without the written permission of EKSMA Optics is prohibited.

	Name	Date	Part number	Rev.	Scale
Approved	A.K.	2020.03.20	131-1265	A	2:1
Drawn	M.B.	2020.03.20			