NOTES:
1. Material: UVFS;
2. G - Fine ground surface;
3. All dimensions are in mm;
4. Wedge: <3 min;
5. Protective chamfers: 0.3 mm x 45°;
6. Laser Induced Damage Threshold:
   > 0.25 J/cm^2 at @800nm, 50Hz, 94fsec pulses,
   > 1.8 J/cm^2 at @1064nm, 50Hz, 11nsec pulses;

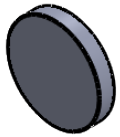

Isometric view 1:3

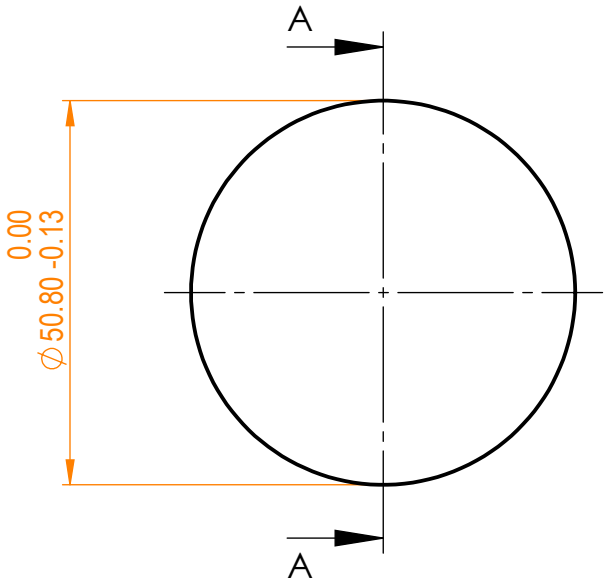

A-A

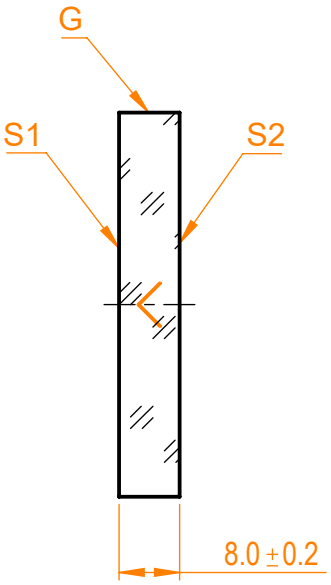

Specifications are subject to change without notice
Dimensions are for reference only

Parameters		
	S1	S2
Shape	Plano	Plano
Radius of curvature	Infinity	Infinity
Surface flatness	λ/10 @633nm	λ @633nm per inch
Surface quality	40-20 s/d	80-50 s/d
Clear aperture	>90%	>90%
Coating	Protected silver R_{avg}>96%@400nm - IR	Uncoated

Eksma Optics
info@eksmaoptics.com
www.eksmaoptics.com

UVFS pl mirror, D=50.8 mm, T=8 mm

Proprietary		Name	Date	Part number	Rev.	Scale
The information in this drawing is property of EKSMA Optics. Any reproduction in part or as a whole without the written permission of EKSMA Optics is prohibited.	Approved	A.K.	2020.12.03	095-3025	A	1:1
	Drawn	V.S.	2020.12.03			