NOTES:
1. Material: N-BK7;
2. G - Fine ground surface;
3. All dimensions are in mm;
4. Wedge: <3 min;
5. Protective chamfers: 0.3 mm x 45°;
6. Laser Induced Damage Threshold:
   > 0.1 J/cm$^2$ at @355nm, 50Hz, 5.7nsec pulses,
   > 0.25 J/cm$^2$ at @1064nm, 50Hz, 11nsec pulses;

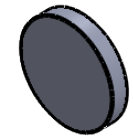

Isometric view 1:3

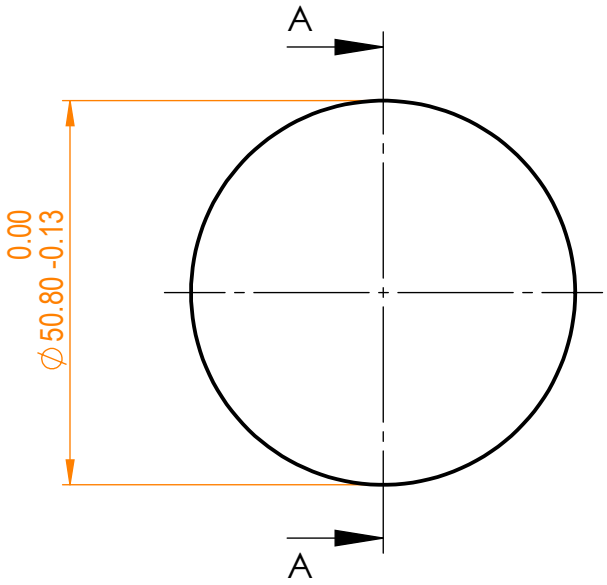


A-A

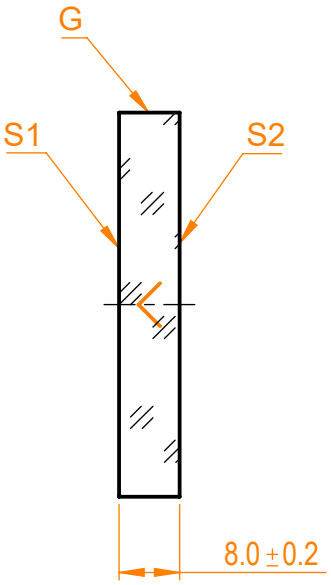


Specifications are subject to change without notice
Dimensions are for reference only

| Parameters | | |
|---|---|---|
| | S1 | S2 |
| Shape | Plano | Plano |
| Radius of curvature | Infinity | Infinity |
| Surface flatness | λ/10 @633nm | λ @633nm per inch |
| Surface quality | 40-20 s/d | 80-50 s/d |
| Clear aperture | >90% | >90% |
| Coating | Protected aluminium $R_{avg}$>86%@300nm - IR | Uncoated |

Eksma Optics
info@eksmaoptics.com
www.eksmaoptics.com

N-BK7 pl mirror, D=50.8 mm, T=8 mm

| Proprietary | | Name | Date | Part number | Rev. | Scale |
|---|---|---|---|---|---|---|
| The information in this drawing is property of EKSMA Optics. Any reproduction in part or as a whole without the written permission of EKSMA Optics is prohibited. | Approved | A.K. | 2020.12.03 | 095-0015 | A | 1:1 |
| | Drawn | V.S. | 2020.12.03 | | | |