NOTES:
1. Material: UVFS;
2. Wedge: <30 arcsec;
3. LDT: >20 mJ/cm^2, 50 fsec,100Hz, 266 nm;
4. Coating adhesion and durability: MIL-C-675A;
5. G - Fine ground surface;
6. All dimensions are in mm;

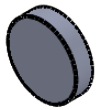

Isometric view 1:1

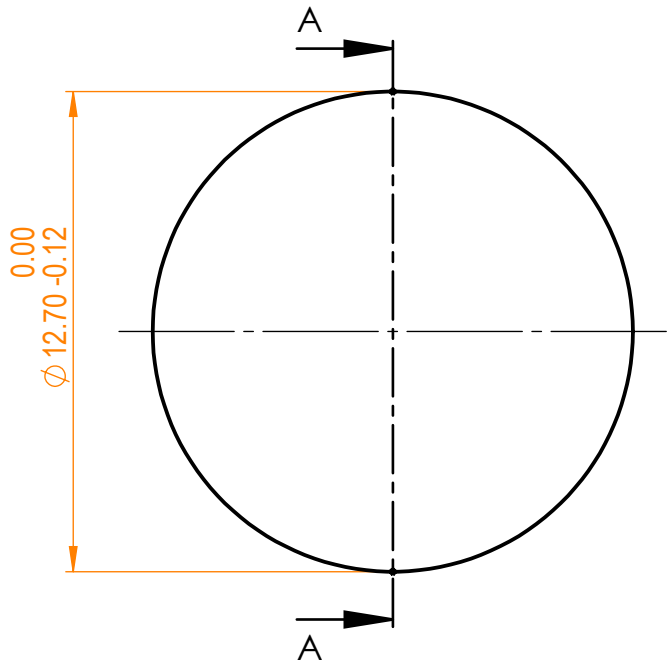

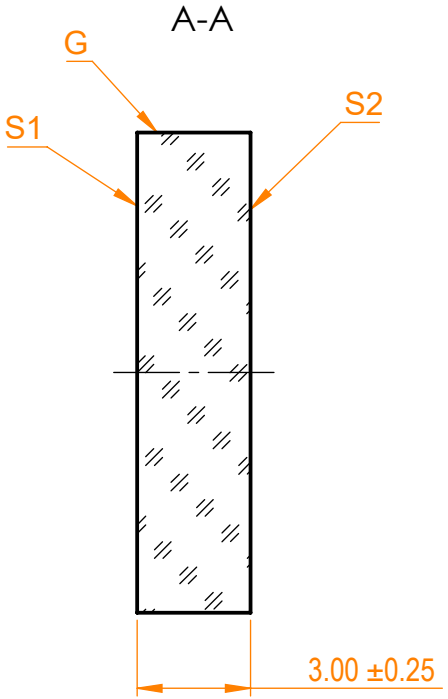

Specifications are subject to change without notice
Dimensions are for reference only

Parameters		
	S1	S2
Shape	Plano	Plano
Surface quality	20-10 s/d	20-10 s/d
Surface flatness	λ/10 @632.8 nm	λ/10 @632.8 nm
Protective chamfers	0.2 - 0.3 mm x 45°	0.2 - 0.3 mm x 45°
Clear aperture	≥85%	≥85%
Coating	Rp=50±3%@266nm, AOI=45°, Low GDD	ARp<0.5%@266nm, AOI=45°

Eksma Optics
info@eksmaoptics.com
www.eksmaoptics.com

D=12.7 mm, Femtoline Laser Beamsplitter

Proprietary
The information in this drawing is property of EKSMA Optics. Any reproduction in part or as a whole without the written permission of EKSMA Optics is prohibited.

	Name	Date	Part number	Rev.	Scale
Approved	A.K.	2020.12.22	041-7950P	A	5:1
Drawn	M.B.	2020.12.22			