NOTES:
1. Material: N-BK7;
2. G - Fine ground surface;
3. All dimensions are in mm;
4. Wedge: <3 min;
5. Protective chamfers: 0.3 mm x 45°;
6. Laser Induced Damage Threshold:
   > 0.1 J/cm^2 at @355nm, 50Hz, 5.7nsec pulses,
   > 0.25 J/cm^2 at @1064nm, 50Hz, 11nsec pulses;



Isometric view 1:4

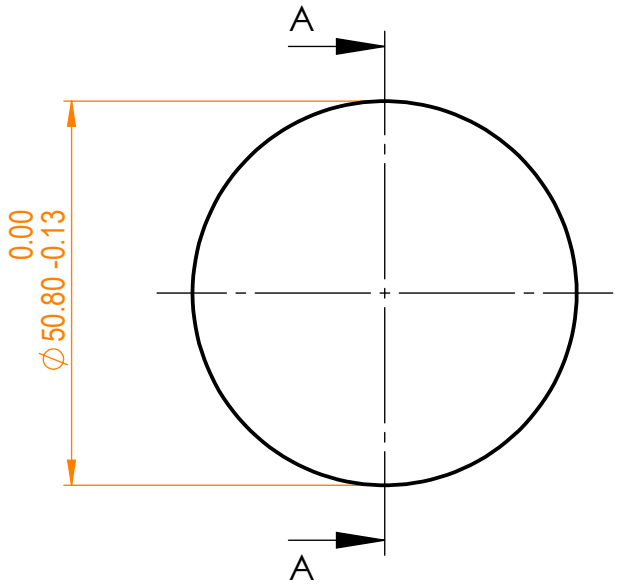

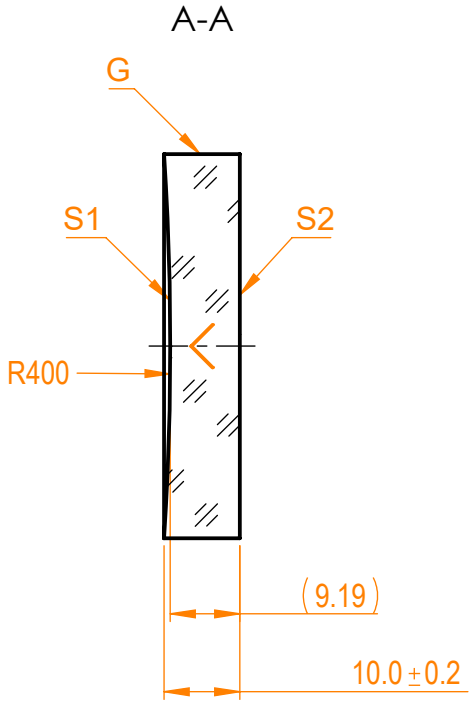

Specifications are subject to change without notice
Dimensions are for reference only

Parameters		
	S1	S2
Shape	Concave	Plano
Radius of curvature	400	Infinity
Surface flatness	λ/10 @633nm	λ @633nm per inch
Surface quality	40-20 s/d	80-50 s/d
Clear aperture	>90%	>90%
Coating	Protected aluminium Ravg>86%@300nm - IR	Uncoated

Eksma Optics
info@eksmaoptics.com
www.eksmaoptics.com

N-BK7 pl/cv mirror, D=50.8 mm, T=10 mm

Proprietary		Name	Date	Part number	Rev.	Scale
The information in this drawing is property of EKSMA Optics. Any reproduction in part or as a whole without the written permission of EKSMA Optics is prohibited.	Approved	A.K.	2020.11.16	095-0115R-400	A	1:1
	Drawn	V.S.	2020.11.16			