NOTES:
1. Material: UVFS;
2. Design wavelength: 355 nm;
3. Focal length: F=-250 mm ± 2%;
4. Centration error: ≤ 3 arcmin;
5. G - Fine ground surface;
6. All dimensions are in mm;

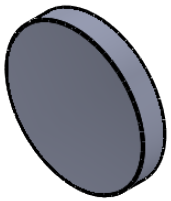

Isometric view 1:1

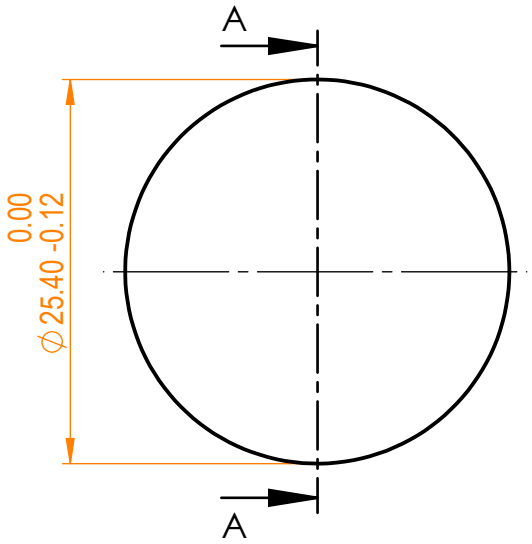

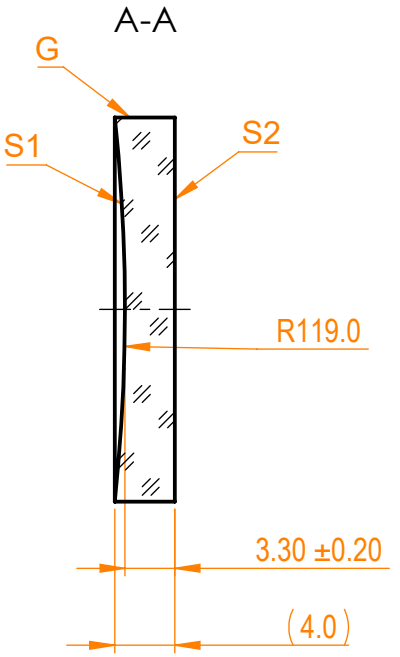

Specifications are subject to change without notice
Dimensions are for reference only

Parameters		
	S1	S2
Shape	Concave	Plano
Radius of curvature	119.0	Infinity
Surface quality	40-20 s/d	40-20 s/d
Surface irregularity	λ/8 @632.8 nm	λ/8 @632.8 nm
Clear aperture	≥90%	≥90%
Protective chamfers	0.2 - 0.3 mm x 45°	0.2 - 0.3 mm x 45°

Eksma Optics
info@eksmaoptics.com
www.eksmaoptics.com

UVFS pl/cv lens, D=25.4 mm, F=-250 mm

Proprietary		Name	Date	Part number	Rev.	Scale
The information in this drawing is property of EKSMA Optics. Any reproduction in part or as a whole without the written permission of EKSMA Optics is prohibited.	Approved	A.K.	2019.07.22	112-1221E	A	2:1
	Drawn	M.B.	2019.07.22			