NOTES:
1. Material: UVFS;
2. G - Fine ground surface;
3. All dimensions are in mm;
4. Centration error: ≤3 arcmin;
5. Protective chamfers: 0.3 mm x 45°;
6. Radius tolerance: ±1%;



Isometric view 1:2

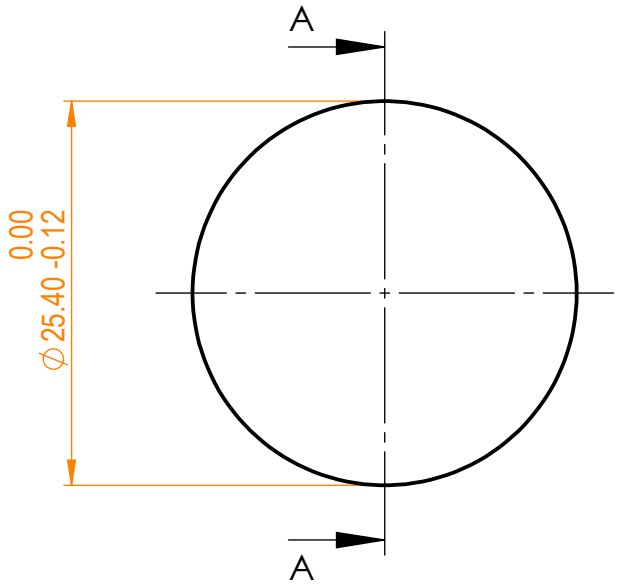


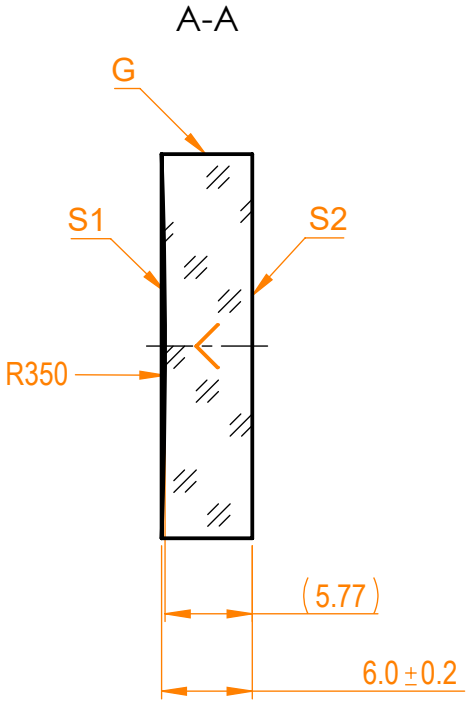


Specifications are subject to change without notice
Dimensions are for reference only

| Parameters | | |
|---|---|---|
| | S1 | S2 |
| Shape | Concave | Plano |
| Radius of curvature | 350 | Infinity |
| Surface irregularity | λ/10 @633nm | λ/10 @633nm |
| Surface quality | 20-10 s/d | 20-10 s/d |
| Clear aperture | ≥90% | ≥90% |
| Coating | - | - |

Eksma Optics
info@eksmaoptics.com
www.eksmaoptics.com

UVFS pl/cv window, D=25.4 mm, T=6 mm

| Proprietary | | Name | Date | Part number | Rev. | Scale |
|---|---|---|---|---|---|---|
| The information in this drawing is property of EKSMA Optics. Any reproduction in part or as a whole without the written permission of EKSMA Optics is prohibited. | Approved | A.K. | 2020.11.16 | 010-1211E | A | 2:1 |
| | Drawn | V.S. | 2020.11.16 | | | |