NOTES:
1. Material: N-BK7;
2. G - Fine ground surface;
3. All dimensions are in mm;
4. Centration error: ≤3 arcmin;
5. Protective chamfers: 0.3 mm x 45°;
6. Radius tolerance: ±1%;



Isometric view 1:4

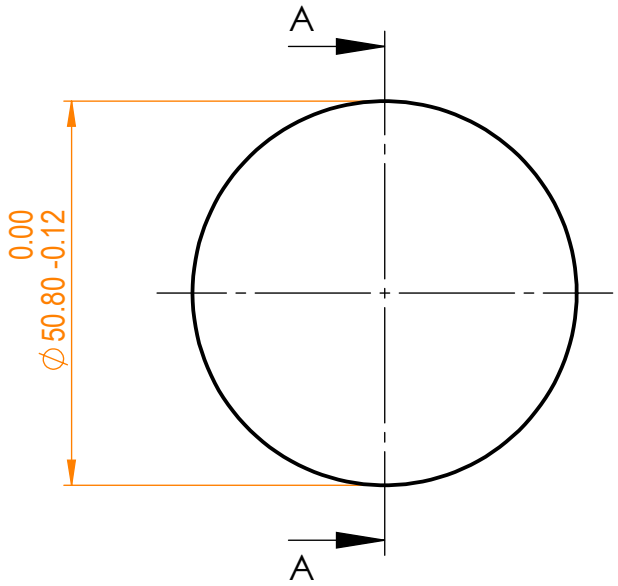

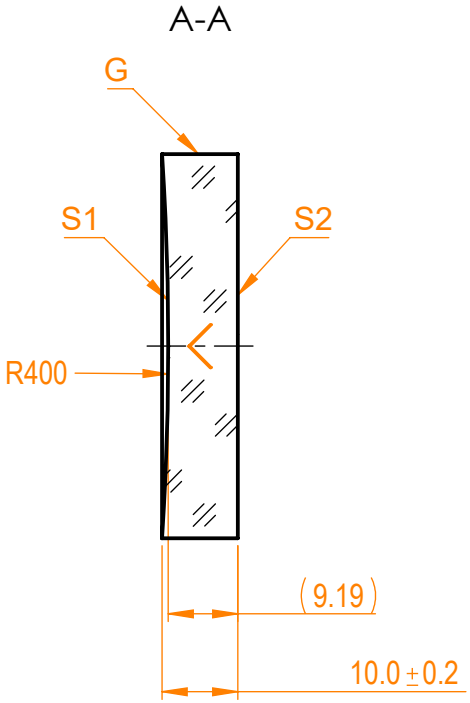

Specifications are subject to change without notice
Dimensions are for reference only

Parameters		
	S1	S2
Shape	Concave	Plano
Radius of curvature	400	Infinity
Surface irregularity	λ/10 @633nm	λ/10 @633nm
Surface quality	20-10 s/d	20-10 s/d
Clear aperture	≥90%	≥90%
Coating	-	-

Eksma Optics
info@eksmaoptics.com
www.eksmaoptics.com

N-BK7 pl/cv window, D=50.8 mm, T=10 mm

Proprietary		Name	Date	Part number	Rev.	Scale
The information in this drawing is property of EKSMA Optics. Any reproduction in part or as a whole without the written permission of EKSMA Optics is prohibited.	Approved	A.K.	2020.11.16	010-0504E	A	1:1
	Drawn	V.S.	2020.11.16			