NOTES:
1. Material: N-BK7;
2. Design wavelength: 546 nm;
3. Focal length: F=+700 mm ± 2%;
4. Centration error: ≤ 3 arcmin;
5. G - Fine ground surface;
6. All dimensions are in mm;

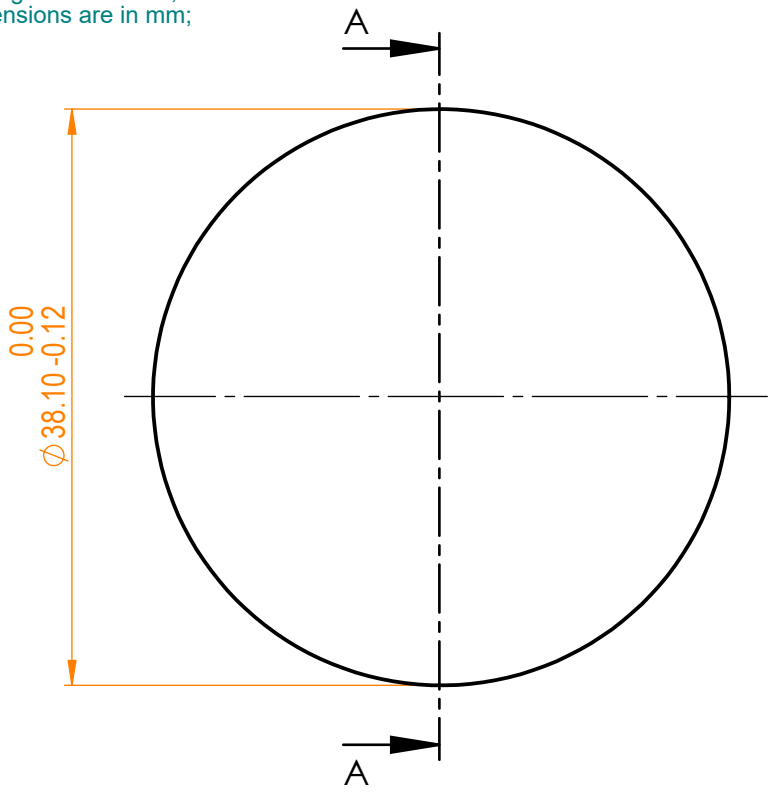

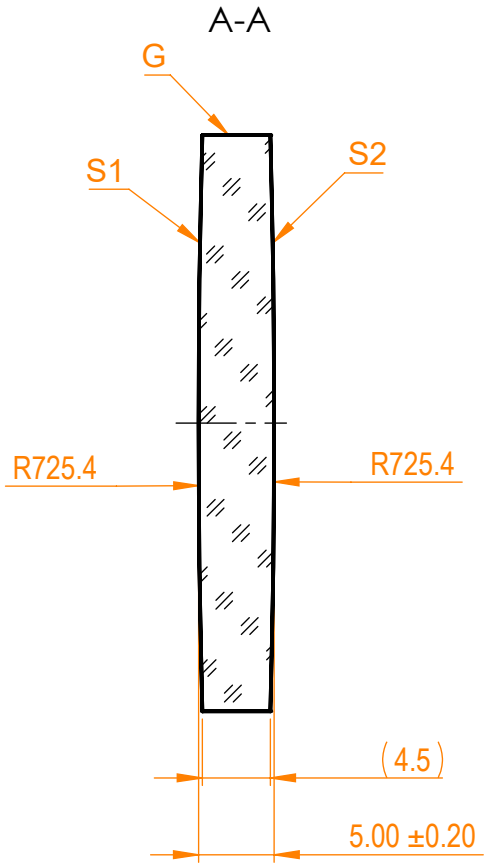

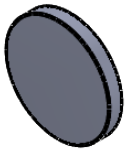

Isometric view 1:2

Specifications are subject to change without notice
Dimensions are for reference only

Parameters		
	S1	S2
Shape	Convex	Convex
Radius of curvature	725.4	725.4
Surface quality	40-20 s/d	40-20 s/d
Surface irregularity	λ/8 @632.8 nm	λ/8 @632.8 nm
Clear aperture	≥90%	≥90%
Protective chamfers	0.2 - 0.3 mm x 45°	0.2 - 0.3 mm x 45°

Eksma Optics
info@eksmaoptics.com
www.eksmaoptics.com

N-BK7 bi/cx lens, D=38.1 mm, F=700 mm

Proprietary
The information in this drawing is property of EKSMA Optics. Any reproduction in part or as a whole without the written permission of EKSMA Optics is prohibited.

	Name	Date	Part number	Rev.	Scale
Approved	A.K.	2019.05.22	111-0440E	A	2:1
Drawn	M.B.	2019.05.22			